5 Schematics

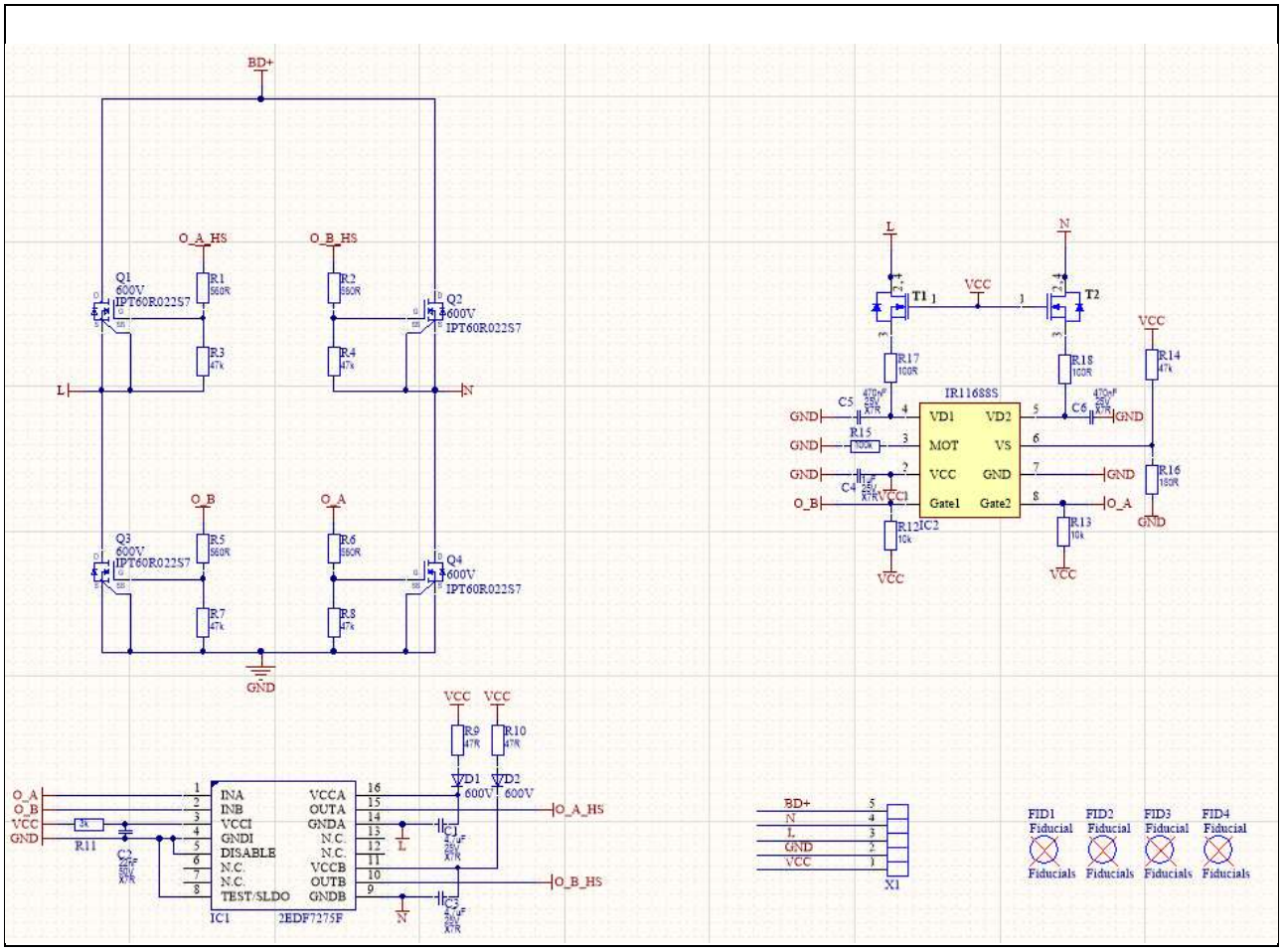

Figure 15 Active bridge daughter card schematic